GAS VAPOR GRILLS

CONTENTS

A	**GENERAL INFORMATION**	**Page 2**
A1	PRODUCT DESCRIPTION	Page 3
A2	TECHNICAL INFORMATION	Page 3
A3	TRANSPORTATION	Page 3
A4	UNPACKING	Page 4
B	**INSTALLATION**	**Page 4**
C	**SAFETY INSTRUCTIONS**	**Page 5**
D	**OPERATION**	**Page 6**
E	**CLEANING & MAINTENANCE**	**Page 7**
F	**TROUBLESHOOTING**	**Page 8**
G	**INJECTOR CHANGE AND GAS SETTING**	**Page 9**
H	**GAS CONNECTION IMAGES**	**Page 10**
I	**SPARE PART LIST- EXPLODING DRAWING**	**Page 12**

A GENERAL INFORMATION

Before installing the appliance, read operation and maintenance instructions carefully.Wrong installation and part changing may damage the product or may cause injury on people.These are not in our company's responsibility to damage the appliance intentionally,negligence,detriments because of disobeying instructions and regulations,wrong connections.Unauthorized intervention to appliance invalidates the warranty.

1. This instruction manual should be kept in a safe place for future reference.

2. **Installation should be made in accordance with ordinances and security rules of that country by a qualified service personnel.**

3. This appliance has to be used by trained person.

4. Please turn off the appliance immediately in the event of malfunction or failure.The appliance should be repaired only by authorized service personnel.Please demand original spare part.

GAS VAPOR GRILLS

A1 PRODUCT DESCRIPTION

*The Professional Gas Vapor Grill,that provides high efficiency has been designed to be used in industrial kitchens.

Product Code	Dimensions (mm)	Weight (kg)	Packaging Dimensions (mm)
	400x730x290	45	430x800x600
GGE800	800x730x290	90	820x800x600
GGE1200	1200x730x290	135	1240x800x600

A2 TECHNICAL INFORMATION

Product Code	Power NG (Kw)	Gas Consumotion (NG)	LPG (Kw)	Gas Consumotion kg/h (LPG)
	5,20	0,55	7,7	0,6
GGE800	10,40	1,10	15,4	1,2
GGE1200	15,60	1,65	23,1	1,8

A3 TRANSPORTATION

*This appliance can not be moved by hand from area to area.It must be moved on pallet with forklift truck.

A4 UNPACKING

*Please unpack the package according to the security codes and ordinances of current country and get rid from the pack.Parts which contacts with food are produced by stainless steel.All plastic parts are marked by material's symbol.

*Please check that all the parts of appliance had come completely and if they are damaged or not during the shipping.

B INSTALLATION

*Please place the product to straight and sturdy ground,please take necessary steps against possibility of overturn.

*Technician who will serve for installation and service for the appliance must be professional on this subject and must have installation and service licenses by the company.

*Connection to Gas Fitment must be done by authorized person.

*The area where the appliance is must have enough ventilation and vent-hole.

*The appliance must be connected correctly according to local and national gas standards of your country.

*The appliance gas entrances are indicated with ''G'' label on the body.

*Connection to gas fitment must be done with suitable diameter metal flex pipe and spheric valve.The spheric valve must be immobilized to a place that is far away from heat and accessible during the danger.After gas entrance connection done,gas leakages must be checked.

*According to the datas on appliance information plate,gas and pressure must be adjusted.If the gas type that is adjusted is not the suitable with gas type that is at installation place,apply the instructions that is about adjustment of different gas type. (**Event :G**)

*If the location where gas vapor grills placed is covered with nonflammable heat insulation material,the distance between them must be 5 cm.Otherwise it should be at least 20 cm.The appliance shouldn't be operated under chimney hood.

C SAFETY INSTRUCTIONS



*Do not use the appliance in insufficient lighted place.



*Do not touch the moving attachments while the appliance operates.



*Do not install the appliance in the presence of flammable or explosive materials.



*Do not operate the appliance when the machine is empty.



*Do not load so less or more than appliance's capacity.



*Do not attempt to use the appliance without suitable protective equipments.



*Because of any reason if there is a fire or flame flare where the appliance is used,turn off all gas valves and electric contactor switch quickly and use fire extinguisher .Never use water to extinguish the fire.



*If there is gas leakage where the appliance is, .do not fire absolutely and do not use electric .



*Definitely do not allow to check the sealing with flame.

D OPERATION

***Control Panel;**

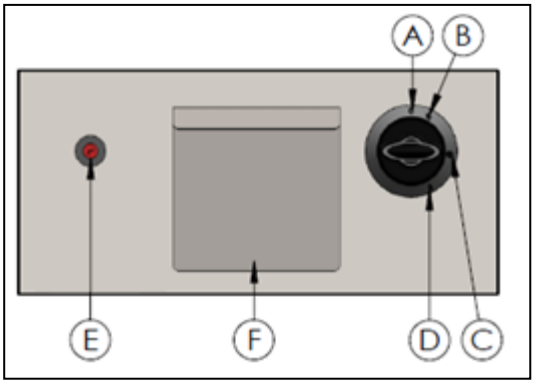

A : OFF Position
B : Lighter Position
C : Full Flame
D : Half Flame
E : Lighter
F : Water Drawer

***Operating;**

- According to type of use,make gas entrance connection from behınd the grill.Because the machine is operated with LPG and NG.
- Turn on the gas valves.
- Press the button at Pilot position before firing to remove the air from gas fitment during first operation.
- Press the gas grill button and provide pilot position.Fire the pilot with suitable lighter.
- In order to heat thermocouple's end keep pressing to button after the pilot is fired.
- For desired temperature switch to half or full flame position.
- Add water to evaporation cabin.
- Operate the grill when it is empty to remove protective oil and place the foods that will be cooked on the grill.
- After the operation is completed,switch the gas valve to (0) position.

E CLEANING & MAINTENANCE

➢ **CLEANING AND MAINTENANCE AFTER EVERY USE**

- Turn off the gas connection before cleaning.
- Clean the outer surface of the appliance with a wet cloth.
- Do not use abrasive cleaning chemicals as these can leave harmful residues.
- Do not wash the appliance with pressure water.
- Do not clean the appliance with a materials that may damage chrome material.
- Clean the grills with suitable spatula.

➢ **PERIODIC CLEANING AND MAINTENANCE**

- Maintenance should be done by qualified person.
- These parts ; Gas storage,pilot,thermocouples,taps,burner,lighter and spark plug cable are not maintained so they need to be changed when they have error.
- Check the gas connection hoses in periodic time.If there is slit,hole..etc,change the hoses.
- Ventilate the area where the device is in periodic times.

F TROUBLESHOOTING

THE APPLIANCE DOESN'T OPERATE	1. Check if the gas connection is done or not. 2. If there is no gas entrance to pilot,the appliance is not operated. 3. Check if the injector holes are opened or not. 4. If the hoses that have gas entrance lose gas due to slit,hole.etc.,the appliance is not operated.

THE APPLIANCE DOESN'T COOK WELL	1. Check if it is operated at suitable gas setting or not. 2. If there is not enough water at evaporation cabin then add water. 3. Do not overload the grill.

THE APPLIANCE STOPPED	1. Gas flow is stopped automatically when the flame is off due to having gas tap that has safety valve.In this situation the appliance is not operated. 2. When there is gas leakage,if there is solenoid gas stopper alarm,gas flow is stopped and the appliance is not operated.Ventilate the area through the agency of vent-hole.

- If cooking at gas vapor grills is not done at suitable quality
- If any function of security doesn't work
  - Do not use the appliance.

***If these problems are still going on,contact with our authorized services.**

G INJECTOR CHANGE AND GAS SETTING

GAS VAPOR GRILL BURNER-INJECTOR CHANGE CHART

NG / LPG					GGE800		GGE1200	
			Ø mm	X	Ø mm	X	Ø mm	X
2	G20		Ø 1,20	2x	Ø 1,20	4x	Ø 1,20	6x
	G25		Ø 1,20	2x	Ø 1,20	4x	Ø 1,20	6x
3	G30	30 mbar	Ø 1,00	2x	Ø 1,00	4x	Ø 1,00	6x
		50 mbar	Ø 1,00	2x	Ø 1,00	4x	Ø 1,00	6x
	G31	37 mbar	Ø 1,00	2x	Ø 1,00	4x	Ø 1,00	6x
		30 mbar	Ø 1,00	2x	Ø 1,00	4x	Ø 1,00	6x

Change of Burner Injector

1. Rip off the injector at the entrance of burner with a suitable tool.
2. Change A injector by paying attention to the datas at chart with suitable injector. (Image 1)
3. Adjust the burner entrance setting (F) by loosening 'B' bolt and moving the valve to forward-back. (Image 2)
4. Change C injector by paying attention to the datas at chart with suitable injector.For this it is enough to take off 'D' fitting and pull the gas pipe to down. (Image 3)

Setting of Half Flame

1. Remove the tap button and set by turning tap half flame screw (K) with suitable screwdriver.(Image 4) Turn it to left for transformation from LPG to N.G,turn it right for transformation from NG to LPG.
2. After this process,operate the appliance and set it not to be deflated during transition from full flame to half flame.

H GAS CONNECTION IMAGES

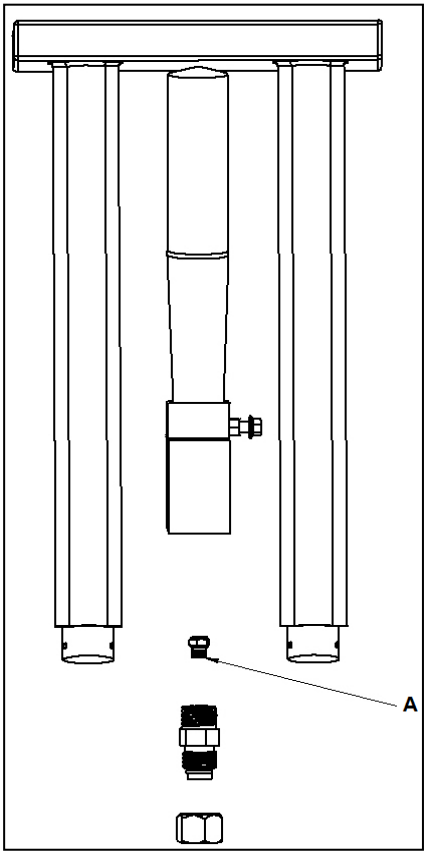

Image 1

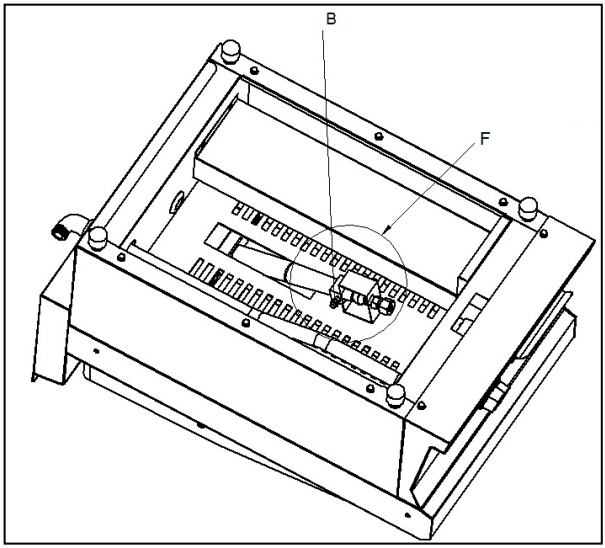

Image 2

H GAS CONNECTION IMAGES

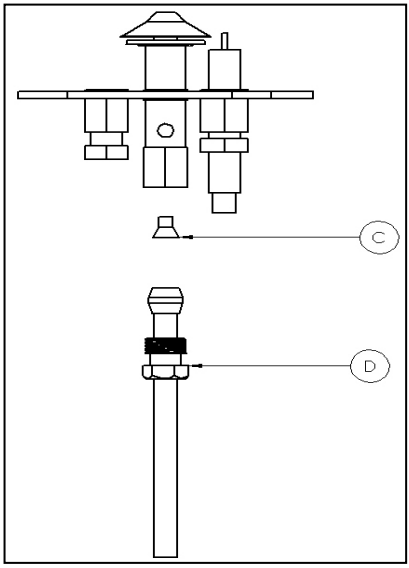

Image 3

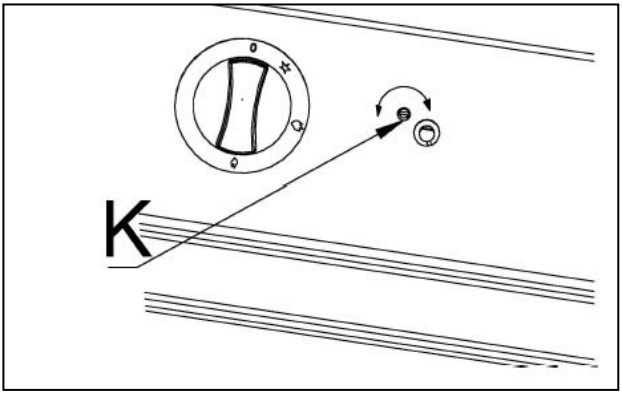

Image 4

I SPARE PART LIST-EXPLODING DRAWING

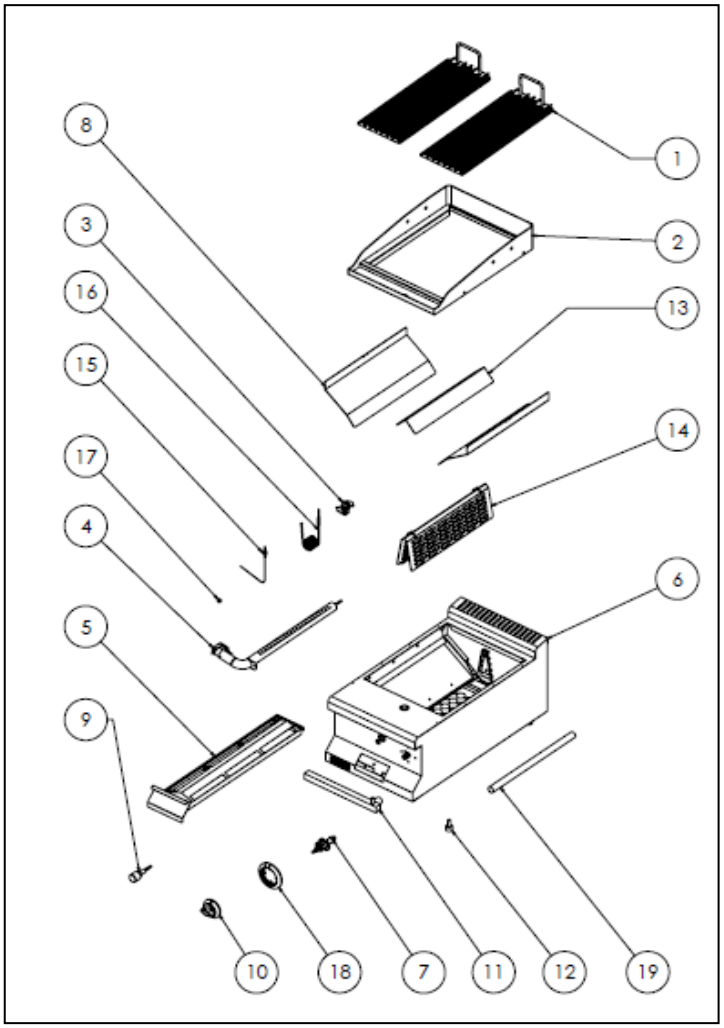

6LG010-S

I SPARE PART LIST-EXPLODING DRAWING

PRODUCT CODE: 6LG010-S		
NO	**PRODUCT NAME**	**P.CODE**
1	GRILL	Y.6LG010-S.001
2	TOP GRILL SHEETMETAL	Y.6LG010-S.002
3	PILOT	Y.6LG010-S.003
4	BURNER	Y.6LG010-S.004
5	DRAWER	Y.6LG010-S.005
6	BASE FRAME	Y.6LG010-S.006
7	GAS VALVE	Y.6LG010-S.007
8	SIDE SLIDING SHEET METAL	Y.6LG010-S.008
9	LIGHTER	Y.6LG010-S.009
10	BUTTON	Y.6LG010-S.010
11	GAS TANK	Y.6LG010-S.011
12	FEET	Y.6LG010-S.012
13	MIDDLE SLIDING SHEET METAL	Y.6LG010-S.013
14	FLAME SPREADER	Y.6LG010-S.014
15	SPARKING PLUG+CABLE	Y.6LG010-S.015
16	THERMO PART	Y.6LG010-S.016
17	INJECTOR GROUP	Y.6LG010-S.017
18	BUTTON BUFFER	Y.6LG010-S.018
19	FLEX HOSE 60CM	Y.6LG010-S.019

I SPARE PART LIST-EXPLODING DRAWING

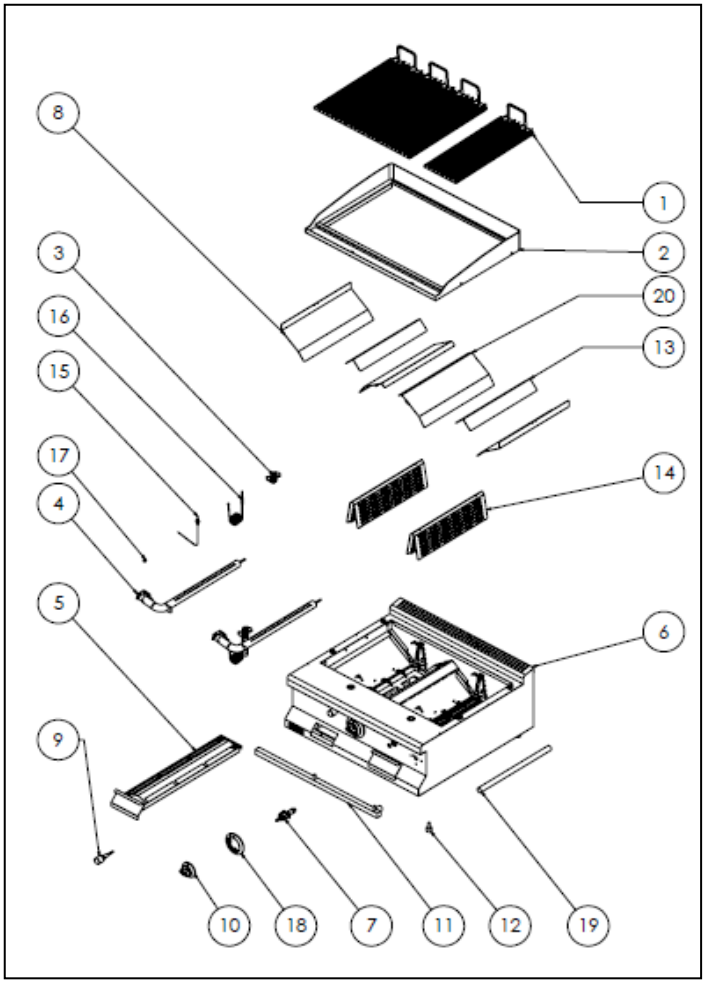

GGE800

I SPARE PART LIST-EXPLODING DRAWING

PRODUCT CODE: GGE800		
NO	**PRODUCT NAME**	**P.CODE**
1	GRILL	Y.6LG020-S.001
2	TOP GRILL SHEETMETAL	Y.6LG020-S.002
3	PILOT	Y.6LG020-S.003
4	BURNER	Y.6LG020-S.004
5	DRAWER	Y.6LG020-S.005
6	BASE FRAME	Y.6LG020-S.006
7	GAS VALVE	Y.6LG020-S.007
8	SIDE SLIDING SHEET METAL	Y.6LG020-S.008
9	LIGHTER	Y.6LG020-S.009
10	BUTTON	Y.6LG020-S.010
11	GAS TANK	Y.6LG020-S.011
12	FEET	Y.6LG020-S.012
13	FLAME HOLDER TOP SHEET METAL	Y.6LG020-S.013
14	FLAME SPREADER	Y.6LG020-S.014
15	SPARKING PLUG+CABLE	Y.6LG020-S.015
16	THERMO PART	Y.6LG020-S.016
17	INJECTOR GROUP	Y.6LG020-S.017
18	BUTTON BUFFER	Y.6LG020-S.018
19	FLEX HOSE 60CM	Y.6LG020-S.019
20	MIDDLE SLIDING SHEET METAL	Y.6LG020-S.020

I SPARE PART LIST-EXPLODING DRAWING

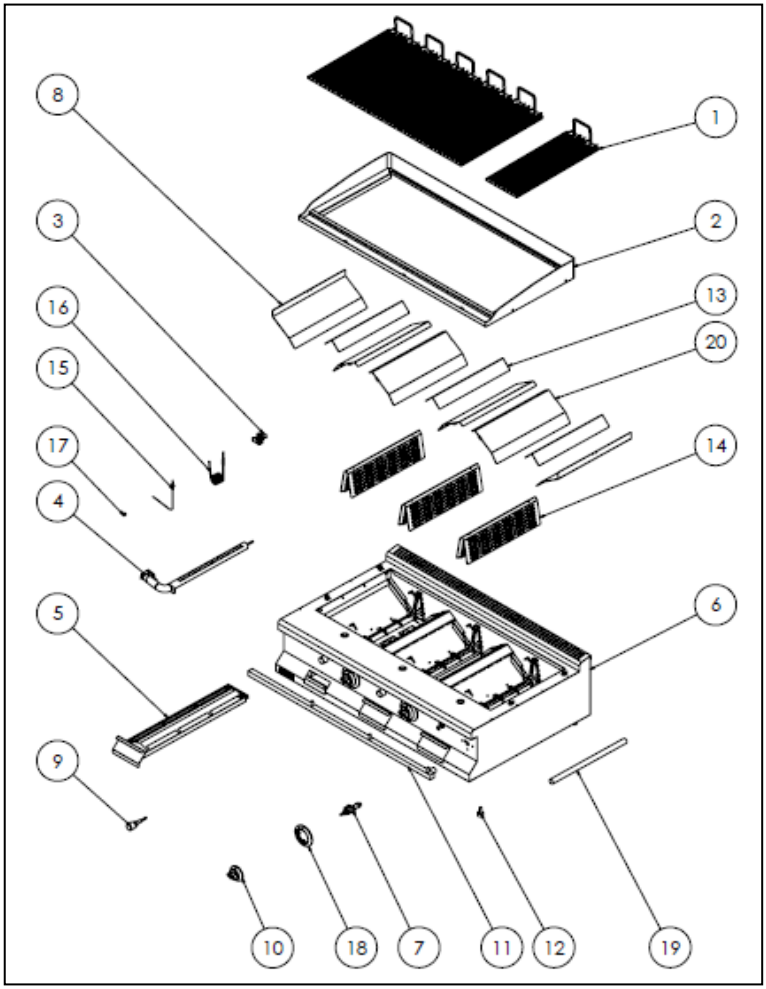

GGE1200

I SPARE PART LIST-EXPLODING DRAWING

PRODUCT CODE: GGE1200		
NO	**PRODUCT NAME**	**P.CODE**
1	GRILL	Y.6LG030-S.001
2	TOP GRILL SHEETMETAL	Y.6LG030-S.002
3	PILOT	Y.6LG030-S.003
4	BURNER	Y.6LG030-S.004
5	DRAWER	Y.6LG030-S.005
6	BASE FRAME	Y.6LG030-S.006
7	GAS VALVE	Y.6LG030-S.007
8	SIDE SLIDING SHEET METAL	Y.6LG030-S.008
9	LIGHTER	Y.6LG030-S.009
10	BUTTON	Y.6LG030-S.010
11	GAS TANK	Y.6LG030-S.011
12	FEET	Y.6LG030-S.012
13	FLAME HOLDER TOP SHEET METAL	Y.6LG030-S.013
14	FLAME SPREADER	Y.6LG030-S.014
15	SPARKING PLUG+CABLE	Y.6LG030-S.015
16	THERMO PART	Y.6LG030-S.016
17	INJECTOR GROUP	Y.6LG030-S.017
18	BUTTON BUFFER	Y.6LG030-S.018
19	FLEX HOSE 60CM	Y.6LG030-S.019
20	MIDDLE SLIDING SHEET METAL	Y.6LG030-S.020

GGM Gastro International GmbH
Weinerpark 16
D-48607 Ochtrup

www.ggmgastro.com info@ggmgastro.com
+49 2553 7220 0