ggmgastro



BMK2-1500N

Pro commercial & Nutrition blender

Instruction for BMK2-1500N Pro Blender

Thank you for choosing our product. In order to ensure safety of its use, please read this instruction carefully before using it, as well as keep it properly for future reference.

Important Safety Knowledge

Before using the machine, be sure to obey the following safety rules:

1. Please do not immerse the pedestal or motor of the machine in water or other liquid.
2. Children can only use this machine under the supervision of adults to ensure safety.
3. Please first unplug the machine after using it, when removing its parts or before washing it.
4. Do not contact the rotating parts of the product especially the blade.
5. Do not operate the machine in any of the following cases: ① The power line or plug is damaged; ② The product falls off and is damaged in the course of transportation. In this case, please send the machine to the nearest after–sales service point for repair. Do not disassemble it without permission.
6. Do not use accessories that are not original ones of the machine for repair.
7. Do not hang the power line on desk or counter with cover to avoid the power line from being damaged.
8. Do not put the machine near coal gas appliance, electric gas appliance or other heating source.
9. Do not put hand or other appliance in the cup to start it in case personal injury might be caused or the machine might be damaged.
10. Please do not go away when using the machine. Shut it down while away from it.
11. Warning I: Since the blade is very sharp, please be careful during operation.
    ① Never try moving the blade when the cup is still on the pedestal.
    ② Do not use the machine when the blade is found loose, missing or damaged. Instead, replace the blade at once.
    ③ To avoid injury, do not use the machine when the blade assembly is not fully mounted to the cup.
    Warning II: Do not open the cup cover and use mixing rod to mix food.

Correct using method: When using mixing rod, open the transparent lid in the middle of the cup cover and the mixing rod can be inserted into the cup safely for normal use.

12. Do not overload the machine. Its maximum capacity should not exceed the top scale indicated on the cup. The capacity should be relatively reduced for thick mixture.
13. The lid must be covered during operation of the lid. The machine needs no special maintenance but washing. If any repair of it is needed, send it to the designated place. Never repair it without permission.
14. This machine has quick/slow start functions. Its effects can only be produced if the time is set first and gear is selected.
15. The rotation speed of this machine is high and very high heat can be generated during dry grinding. When the temperature of the food drily grinded reaches certain ignition point, it will spontaneously combust. Therefore, dry grinding is not recommended.

* The instructions for appliances shall warn of potential injury from unintended use

b)Care shall be taken when handling the sharp cutting blades, emptying the bowl and during cleaning

c)Be careful if hot liquid is poured into the food processor or blender as it can be ejected out of the appliance due to a sudden steaming.

d)Always disconnect the appliance from the supply if it is left unattended and before assembling, disassembling or cleaning

e)This appliance shall not be used by children. Keep the appliance and its cord out of reach of children.

f)Appliances can be used by persons with reduced physical, sensory or mental capabilities or lack of experience and knowledge if they have been given supervision or instruction concerning use of the appliance in a safe way and if they understand the hazards involved.

g)Children shall not play with the appliance.

h)The instructions shall include details on how to clean surfaces in contact with food.

i)Switch off the appliance and disconnect from supply before changing accessories or approaching parts that move in use.

j)WARNING - Always operate the blender with the lid or the guard in position as indicated in the instructions

k)Never put a hand in the jar when it is placed on the base unit.

l)If food needs to be pushed down, use a suitable tool e.g. spatula

m)This appliance is intended to be used in household and similar applications such as:
staff kitchen areas in shops, offices and other working environments;
farm houses;
by clients in hotels, motels and other residential type environments;
bed and breakfast type environments.

Product Specification



Before using this machine, please read this instruction carefully. Besides, keep it properly for future reference. Examine the rated working voltage to see if it is consistent with the voltage in your area. The machine is mainly compsed of the following:

1, Big lid & small cap
2, Blender Jar
3, Metal bracket & mat
4, Control panel & LCD
5, Sound covers set

Sound insulation cover removing and installing

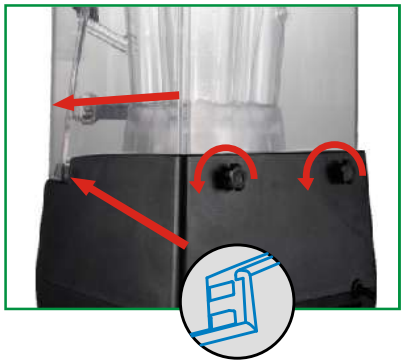

1, Make sure blender is power off. and sound cover was closed.
2, Sound insulation cover nuts loosely twisted to the left.
3, Outward direction to promote sound insulation cover.
4, Clean sound insulation cover, by the above steps to reverse operation, can be installed.

Operation control panel

① LCD display
② Start/Stop
③ Time
(Increase or decrease the time as circulation)
④ Speed
(Increase or decrease the speed as circulation)
⑤ Power switch
⑥ Pulse
⑦ Program 1
⑧ Program 2
⑨ Program 3
⑩ Program 4/DIY
⑪ Mixing

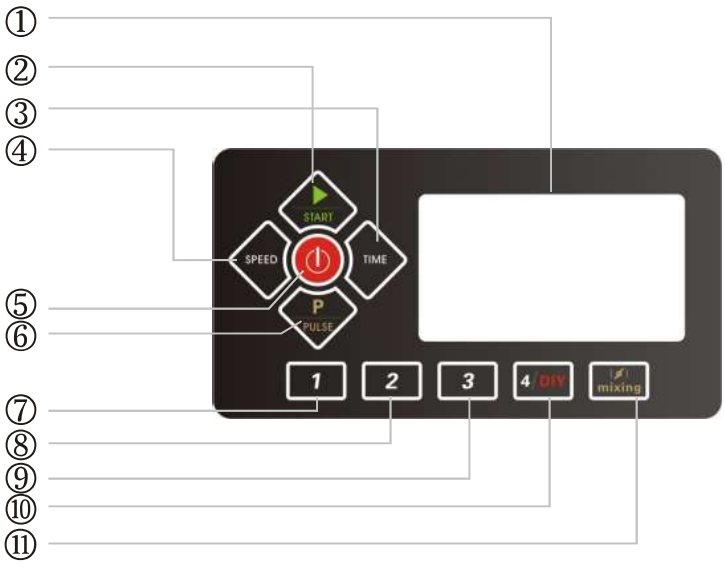

Product Specification

Before using this machine, please Examine the rated working voltage to see if it is consistent with the voltage in your home. The blender is composed of the following:

1、Sound cover
2、Container
3、Handle
4、Control panel
5、Housing/Base
6、Sound cover sides
7、Non-slip rubber mat
8、Enclosures fixed parts
9、Wires
10、Lids and Covers
11、Shockproof mat

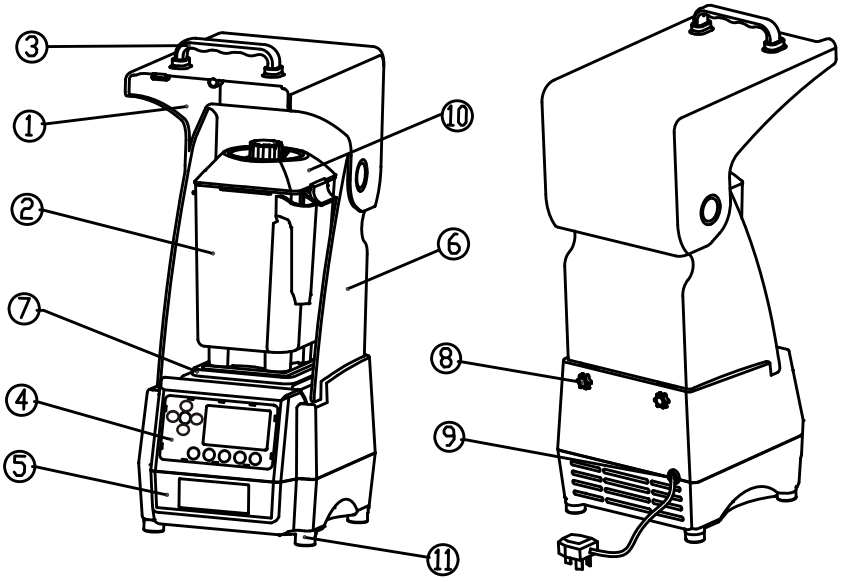

Assembly of Cover:

The cover consists of two parts which makes it very easy for cleaning, installation and sealing.make sure jar③ was placed correctly.

· To open the closely fit stirring cup cover ②, you only need to pull it upward. It will be covered if the pressed downward.

· To lock the transparent cover, you only need to insert aligned to the center slot of stirring cup cover① and rotate it clockwise. It will be unlocked if it is turned counterclockwise.

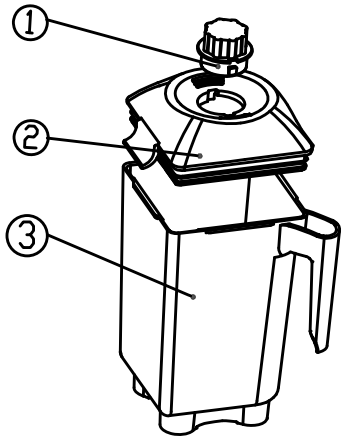

Sound insulation cover

1、Pull the handle to open the front cover in place, and then both hands Slightly outward open enclosures.

2、Re-install the sound cover, both hands steady put the cover clip in rear cover protruding, and then pull the handle rotate downward to check whether the flexible。

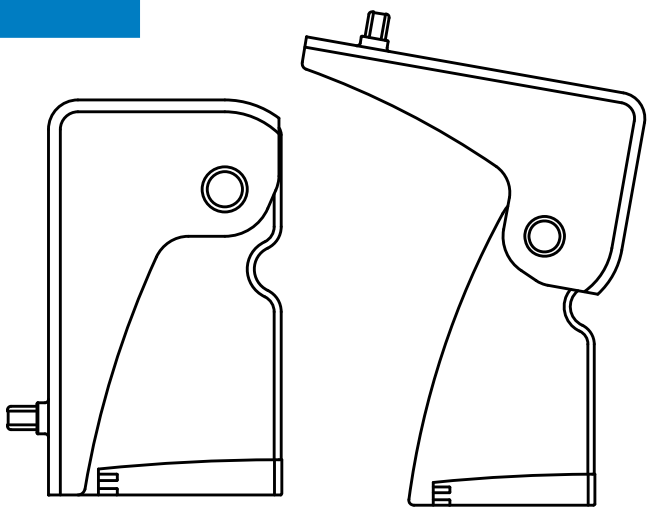



New Function

Built-in **(P1 mode)**
Manual programming mode

*There are two kinds(**P0** and **P1**) of program modes built in the machine.
P0 is the current default factory routine pre-set program.
P1 is the manual programming mode that needs special operation to enter, in this mode, the user can manually edit the time and speed parameters in pre-set programs "1", "2","3","DIY" and "Mixing".

Methods and operation instructions of manual programming mode

*Each edited program can be divided into 1-4 naturally connected operation steps.
1)Press the red "Power" button to turn on the blender and standby.
2)Press the red "Power" button again and keep holding for 7 seconds, till the screen displays "P0" or "P1"
3)Press the green "Start" button to switch and select "P0" or "P1".
4)Press the red "Power" button to save and exit.
Note: Please choose "P0" or "P1" within 4 seconds, otherwise it will exit automatically.

How to enter P1 mode

1)Press "1" button("2","3","DIY" and "Mixing" are the same), keep holding for 2 seconds, till the screen flashes "□1", that means you've entered the first operation step of this editable program. Please press "Time" and "Speed" button to cycle and choose the time and speed accordingly.
2)After setting time and speed of "□1", press button "1" and screen will flash "□2", that means you've entered the second operation step of this editable program. Repeat to cycle and choose the time and speed accordingly.
3)Press button "1" again to edit steps and contents of "□3" and "□4". After all editing, press the red "Power" button to save and exit automatically.
4) "2","3","DIY" and "Mixing" can be programmed in the same way.
Note: After entering the programming mode, if there is no edition within 10 seconds, it will exit automatically.

Restore default factory routine pre-set program

1)Press the red "Power" button to turn on the blender and standby.
2)Press the red "Power" button again and keep holding for 7 seconds, till the screen displays "P0" or "P1"
3)Press the green "Start" button to switch and select "P0".
4)Press the red "Power" button to save and exit.

If the vegetable or fruit in the blender can not be blended during mixing, please check the followings:

- If the quantity of water is enough
- If the volume of vegetable or fruit is too high
- Make sure you put the seeds or soft food matrials at the bottom of the cup.
- If the blade gets loose



Preparation before Operation

1. Before operation, ensure the nutrition fruit blender is power off.
2. This device is equipped with magnetic induction safety switch. Please put the cup smoothly on the machine. Connect it to a power source.
3. Put the processing material in the cup, Ensure its top is not higher than the "MAX" line and cover the lid.

The intelligent modes instructions *P0 mode*

Modes	Instructions
1	Press the mode" 1 ",LCD screen will display as " 1 ",and timer will set up as "20"seconds,after press" ▶ ",Timer will in countdown mode.and when operation was finished,The machine emits "DeDeDe" sounds, suggesting that mixing procedures have been completed.
2	Press the mode" 2 ",LCD screen will display as " 2 ",and timer will set up as "30"seconds,speed grade were 6grades.The machine running for 7 seconds, stop 3 seconds,followed by cycle operation.when operation was finished,The machine emits "DeDeDe" sounds.
3	Press the mode" 3 ",LCD screen will display as " 3 ",and timer will set up as "40"seconds,speed grade were 6grades.The machine running for 7 seconds, stop 3 seconds,followed by cycle operation.when operation was finished,The machine emits "DeDeDe" sounds.
4 DIY	Press the mode " 4 DIY ", LCD screen will display as " 4 ", the initial speed data is the minimum speed, and initial time will set up as "10" seconds. Adjust the "Speed" and "Time" according to personal usage. In this mode, "Speed" and "Time" value could be adjusted immediately at any time. When operation was finished, the machine emits "DeDeDe" sounds. Tips: "Speed" total of 12 grades. Each press to increase or decrease 1 grade. Press and hold the button, the shift display increase or decrease rapidly. "Time" with 180s. Starts from 10s, each press to increase or decrease 1s. Press and hold the button, the shift display increase or decrease rapidly. 1, Only the " 4 DIY " mode can adjust "Speed" and "Time" values accordingly. 2. The latest operational data will be automatically memorized. But after the machine power off, it will automatically restore the initial data.
mixing	Press the mode" mixing ",LCD screen will display as " ",and timer will set up as "30"seconds,the first"5" seconds from slow to fast buffer start, from the "25" second start running high-speed rotationwhen operation was finished,The machine emits "DeDeDe" sounds.

- Press" ⏻ " to stop the operation in any mode, and press it again to power off the machine.
- Mixing/crushing many ingredients or ice, press " P " few times firstly, then select the mode.
- **The speed max range editable value is 12.**
- **The time max range editable value is 180 seconds.**

(4 steps in each program, max 180 seconds in each step).



Product Maintenance

Faults and Their Troubleshooting

	Fault Description	Troubleshooting
1	The machine does not work.	Check the power switch to see if it is turned on.
2	Loud work noise is produced.	① Remove the stirring cup and reposition it. ② Examine the pedestal to see if it is put on solid panel.
3	The blade does not rotate.	① Examine the power supply to see if it is normal. ② Examine the connector to if it falls off.
4	The swing of the stirring cup is large.	① Remove the stirring cup and reposition it. ② Shut down the machine and remove the stirring cup and see if there is any bulk matter in the cup.
5	The stirring cup has the problem of water leakage.	① Examine the screws at the bottom of the stirring cup to see if they get loose. ② Examine the seal ring to see if they fall off.

Cleaning

1. Before cleaning, be sure to unplug the blender.
2. Wipe the body and cover of the blender with sponge or duster cloth and then reverse it for airing.
3. Warm water is recommended for its washing. Add some detergent to the water. Start the motor and after it rotates for 5s to 10s, pour the water and then flush the stirring cup, cup cover, etc thoroughly with clean water. Reverse the blender and allow it to dry.
4. Never wash the blender by putting the hand into it.
5. Neutral detergent can be used to wipe the motor seat. Never use water to wash it. Then wipe it clean with dry cloth.
6. Wash the seat and stirring cup separately.
7. Do not immerse the seat in water or put it in dish-washing machine to wash it.
8. Never clean the cutting tool in the blender with hand. Cleaning tools must be used to ensure safety.

Performance Parameters

• Model:	BMK2-1500N
• Product name:	Pro Commercial Blender
• Power:	1000W
• Capacity:	64Ounce/2.0L
• Voltage/Frequency:	220V ~ 50-60Hz
• Material:	Copolyester environmental protection materials
• Bearing	High-precision spherical bearings
• Wire	1.3m in length
• Total Height:	53 CM

GGM Gastro International GmbH
Weinerpark 16
D-48607 Ochtrup

www.ggmgastro.com info@ggmgastro.com
+49 2553 7220 0