ELECTRICAL CHICKEN ROTISSERIE

CONTENTS

A	**GENEREAL INFORMATION**	**Page**	**2**
A1	PRODUCT DESCRIPTION	Page	3
A2	TECHNICAL INFORMATION	Page	3
A3	TRANSPORTATION	Page	4
A4	UNPACKING	Page	4
B	**INSTALLATION**	**Page**	**4**
C	**SAFETY INSTRUCTIONS**	**Page**	**6**
D	**OPERATION**	**Page**	**7**
E	**CLEANING & MAINTENANCE**	**Page**	**8**
F	**TROUBLESHOOTING**	**Page**	**9**
G	**DEVICE VIEWS**	**Page**	**10**
H	**SPARE PART LIST- EXPLODING DRAWINGS**	**Page**	**11**
I	**ELECTRİCAL CİRCUİT DİAGRAM**	**Sayfa**	**20**

A GENERAL INFORMATION

Before installing the appliance, read operation and maintenance instructions carefully.Wrong installation and part changing may damage the product or may cause injury on people.These are not in our company's responsibility to damage the appliance intentionally,negligence,detriments because of disobeying instructions and regulations,wrong connections.Unauthorized intervention to appliance invalidates the warranty.

1. This instruction manual should be kept in a safe place for future reference.

2. Installation should be made in accordance with ordinances and security rules of that country by a qualified service personnel.

3. This appliance has to be used by trained person.

4. Please turn off the appliance immediately in the event of malfunction or failure.The appliance should be repaired only by authorized service personnel.Please demand original spare part.

ELECTRICAL CHICKEN ROTISSERIE

A1 PRODUCT DESCRIPTION

*The Professional Electrical chicken rotisserie ,that provides high efficiency has been designed to be used in industrial kitchen.

Product Code	Dimensions (mm)	Weight (kg)
EHGE18	1098x480x820	80
EHGE30	1098x480x1170	104
EHGE530	1100x480x2030	193
EHGE48	1098x480x2020	183

A2 TECHNICAL INFORMATION

Code	Capacity (Pieces)	Power (KW)	Operating Voltage (V)	Frequency (Hz)
EHGE18	18	9	220/380	50
EHGE30	30	15	220/380	50
EHGE530	30	15	220/380	50
EHGE48	48	24	220/380	50

A3 TRANSPORTATION

*This appliance can not be moved by hand from area to area.It must be moved on pallet with forklift truck.

A4 UNPACKING

*Please unpack the package according to the security codes and ordinances of current country and get rid from the pack.Parts which contacts with food are produced by stainless steel.All plastic parts are marked by material's symbol.

*Please check that all the parts of appliance had come completely and if they are damaged or not during the shipping.

B INSTALLATION

*Please place the product to straight and sturdy ground,please take necessary steps against possibility of overturn.

*Technician who will serve for installation and service for the appliance must be professional on this subject and must have installation and service licenses by the company.

*Connection to Electric Power Supply must be done by authorized person.

*Please be sure that the voltage connected to appliance must be equal with the voltage which is on appliance's label.

⚠ This appliance must be connected to an earthed outlet in accordance with safety rules and standard.

*Appliance's earthing must be connected to earthing line on panel which is nearest to electric installation.

*Connection to the main fuse and leak current fuse must be done in accordance with the current regulations.

*****The rotisserie is equipped with at least one infrared burner and may have up to eight. Each burner has three linear resistors, arranged in a parallel configuration over the width of the roasting chamber. The electric equipment of the rotisserie is supplied by three-phase 380 VAC, 50 Hz power set by the companies which produce in accordance with legal regulations and the power conditions. The rotisserie contains a neutral wire and an earthing connection. Power is supplied through a terminal box located at the rear of the appliance. (figure 10)

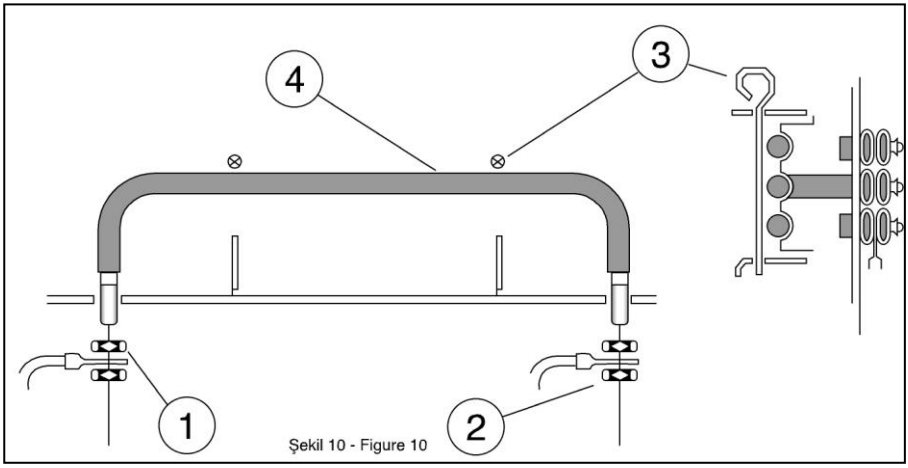

Şekil 10 - Figure 10

MAINS CONNECTION

Remove the control knobs, loosen the screws holding the knob cover and remove the cover. Connect the three phase wires, neutral and earthing connection to the terminal strip, then attach the cable to clamp (A).
Make sure that the cable rating is high enough for the rotisserie power!
The drive motor is factory-installed and does not require any further installation.
(Figure 11)

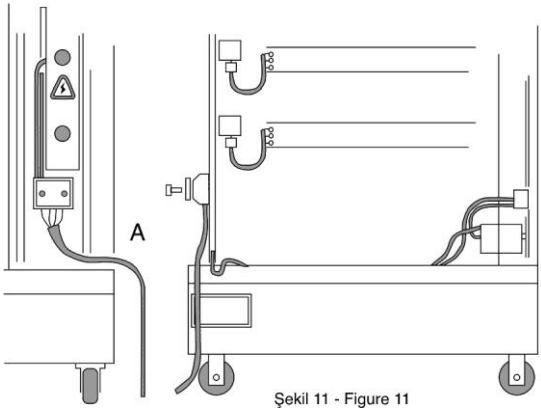

Şekil 11 - Figure 11

C SAFETY INSTRUCTIONS

*Do not use the appliance in insufficient lighted place.

*Do not touch the moving attachments while the appliance operates.

*Do not install the appliance in the presence of flammable or explosive materials.

*Do not operate the appliance when the machine is empty.

*Do not load so less or more than appliance's capacity.

*Do not attempt to use the appliance without suitable protective equipments.

*Because of any reason if there is a fire or flame flare where the appliance is used,turn off all gas valves and electric contactor switch quickly and use fire extinguisher .Never use water to extinguish the fire.

*All the damages because of not having earthing connection will not be on warranty.

D OPERATION

*** Control Panel:**

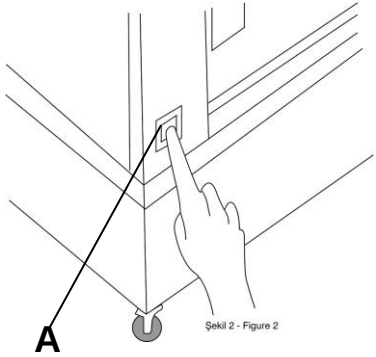

A : ON/OFF button

***Operating:**

- Plug in the appliance.
- Switch to (on/off) position.
- The rotisserie is equipped with a drive chain transmission used to rotate all spits at the same time in order to heat all meat evenly. The optimal preset rotational speed for perfect roasting is 4.5 rpm and the gear box ensures maximum continuous torque of 81.9 Ncm (9lbs.inch).
- The transmission is located in the left column (facing the machine), with the motor at the bottom above the base. The column also contains a lighted start-stop switch.
  To use all burners, always begin by lighting the top burner, working downward until reaching the lowest burner as shown. Never leave a burner on for roasting when the only immediately below it is off!
- Your rotisserie comes equipped with an accessory kit that includes spits, skewers, a hook to remove the spits and a tray.
- Used to hold the chickens or pieces of meat. The spits have a square cross-section which is inserted into the drive hubs and used to turn the meat. The spits are equipped with a heat-resistant handle to prevent burns. The number of spits depends on the model.
- Placed beneath the spits at the bottom of the roasting chamber to collect juices released when roasting. Always clean the tray carefully after each roast.
- Turn off all knobs when the rotisserie is not used.

E CLEANING & MAINTENANCE

To clean

- To clean the rotisserie, you may use any nontoxic, nonaggressive, product available on the market.
- Take care not to pour the cleaning product directly on the burner's microperforated surface.
- Never use abrasive products that could scratch painted or stainless steel surfaces. The quality of your roasts depend on the cleanliness of your rotisserie.
- To cleaning the plate between the burners

Follow these steps

a) Push the lower edge of the plate up to its horizontal position.
b) Push the plate as far as possible.
c) Pull the plate up and then out to remove completely.

To insert the plate, follow these steps

a) Insert the horizontal plate such that the side slots match the pivots on both sides.
b) Let the plate rotate freely.

Tensing the drive chain

To tense the drive chain, loosen the idler pinion screws (A) with a screwdriver and push the pinion slightly to the right until the chain is taut. Tighten the screw (A). Lubricate with molikote-type grease or similar (Figure 9)

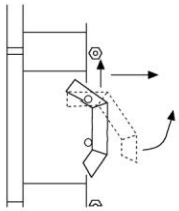

Şekil 8/A - Figure 8/A

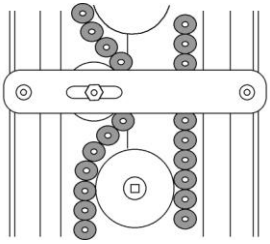

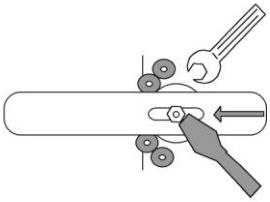

Şekil 9 - Figure 9

F TROUBLESHOOTING

THE APPLIANCE DOESN'T OPERATE	1. Check if the appliance is plugged in. 2. Check the electrical connections and voltage. 3. Check if the fuse is on or off.

THE APPLIANCE STOPPED	1. The appliance can stop due to low voltage.In this situation check the voltage.

- If chicken rotisserie is not done at suitable quality
- If any function of security doesn't work,
  - Do not use the appliance.

***If these problems are still going on,contact with our authorized services.**

G APPLIANCE DRAWINGS

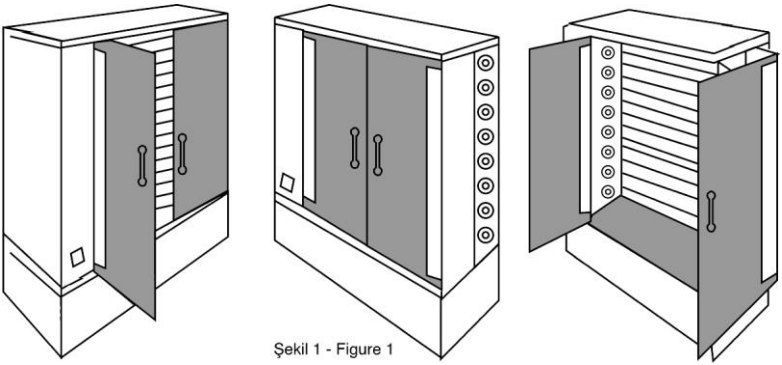

Şekil 1 - Figure 1

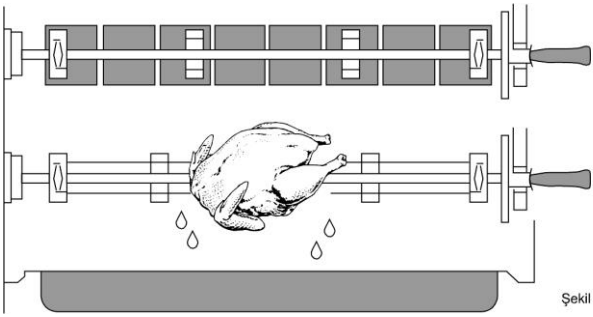

Şekil 4 - Figure 4

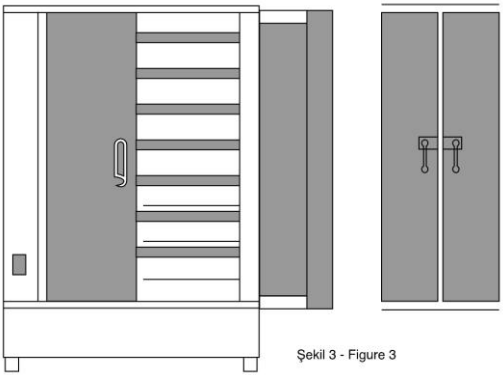

Şekil 3 - Figure 3

H SPARE PART LIST- EXPLODING DRAWINGS

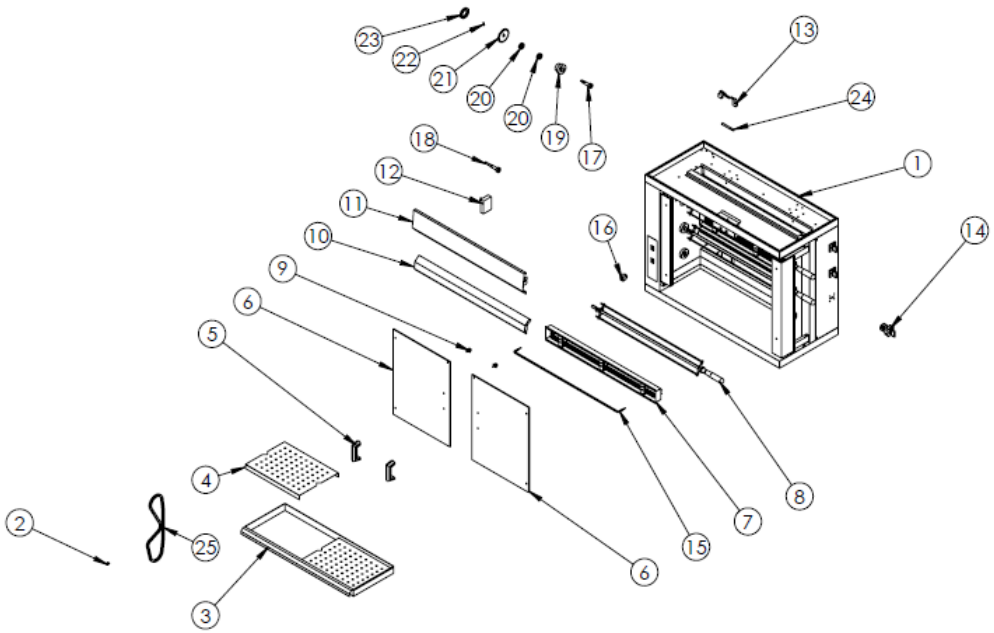

EHGE18

H SPARE PART LIST- EXPLODING DRAWINGS

PRODUCT CODE : EHGE18		
NO	**PRODUCT NAME**	**P.CODE**
1	CHASSIS	Y.EMP.3EE.1001
2	GEAR CHAIN LOCK	Y.EMP.3EE.1002
3	OIL PAN PLATE	Y.EMP.3EE.1003
4	FLAT SHEET	Y.EMP.3EE.1004
5	BAKALITE HANDLE	Y.EMP.3EE.1005
6	TEMPERED GLASS RIGHT LEFT	Y.EMP.3EE.1006
7	RESISTANCE SHEET	Y.EMP.3EE.1007
8	CHICKEN ROASTING SHAFT	Y.EMP.3EE.1008
9	DOOR LOCK CLIP	Y.EMP.3EE.1009
10	RESISTANCE INTERMEDIATE SHEET	Y.EMP.3EE.1010
11	RESISTANCE INTERMEDIATE SHEET	Y.EMP.3EE.1011
12	KELVİN CHICKEN MOTOR 45 KW	Y.EMP.3EE.1012
13	HALOGEN LAMP SENSE	Y.EMP.3EE.1013
14	ŞARTEL TRİFAZE 3x20A	Y.EMP.3EE.1014
15	RESISTANCE	Y.EMP.3EE.1015
16	ON-OFF SWITCH	Y.EMP.3EE.1016
17	BEARING SHAFT SHORT	Y.EMP.3EE.1017
18	BEARING SHAFT LONG	Y.EMP.3EE.1018
19	SPINDLE BEARING ALUMINUM	Y.EMP.3EE.1019
20	6202 ZZ BEARING	Y.EMP.3EE.1020
21	GEAR	Y.EMP.3EE.1021
22	SLOTTED PIN 5x20	Y.EMP.3EE.1022
23	AZM MASON NUT	Y.EMP.3EE.1023
24	HALOGEN LAMP	Y.EMP.3EE.1024
25	GEAR CHAIN	Y.EMP.3EE.1025

H SPARE PART LIST- EXPLODING DRAWINGS

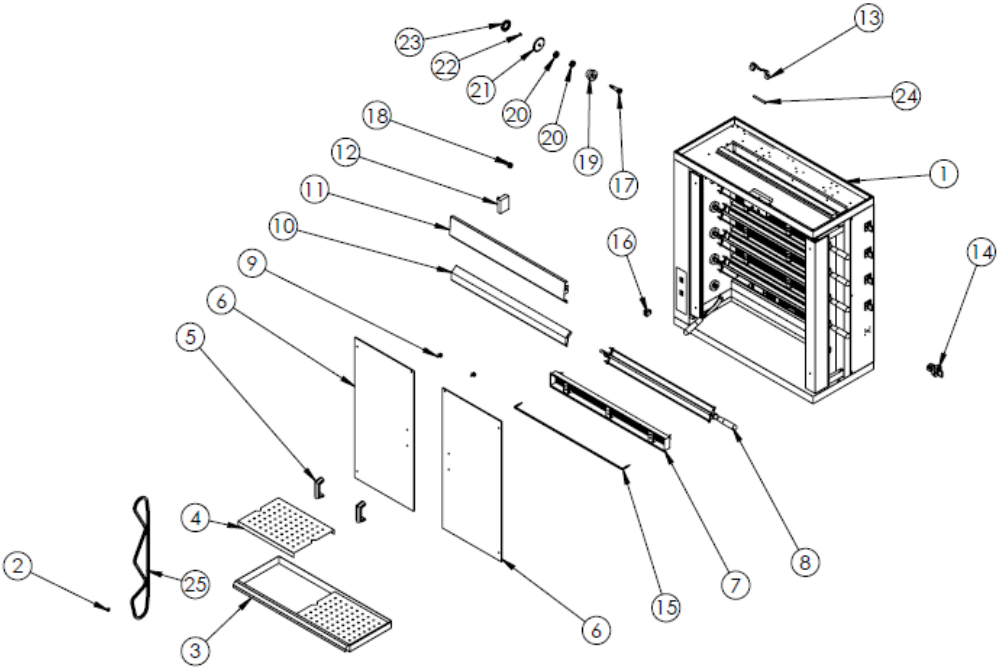

EHGE30

H SPARE PART LIST- EXPLODING DRAWINGS

PRODUCT CODE : EHGE30		
NO	**PRODUCT NAME**	**P.CODE**
1	CHASSIS	Y.EMP.5EE.1001
2	GEAR CHAIN LOCK	Y.EMP.5EE.1002
3	OIL PAN PLATE	Y.EMP.5EE.1003
4	FLAT SHEET	Y.EMP.5EE.1004
5	BAKALITE HANDLE	Y.EMP.5EE.1005
6	TEMPERED GLASS RIGHT LEFT	Y.EMP.5EE.1006
7	RESISTANCE SHEET	Y.EMP.5EE.1007
8	CHICKEN ROASTING SHAFT	Y.EMP.5EE.1008
9	DOOR LOCK CLIP	Y.EMP.5EE.1009
10	RESISTANCE INTERMEDIATE SHEET	Y.EMP.5EE.1010
11	RESISTANCE INTERMEDIATE SHEET	Y.EMP.5EE.1011
12	KELVİN CHICKEN MOTOR 45 KW	Y.EMP.5EE.1012
13	HALOGEN LAMP SENSE	Y.EMP.5EE.1013
14	ŞARTEL TRİFAZE 3x20A	Y.EMP.5EE.1014
15	RESISTANCE	Y.EMP.5EE.1015
16	ON-OFF SWITCH	Y.EMP.5EE.1016
17	BEARING SHAFT SHORT	Y.EMP.5EE.1017
18	BEARING SHAFT LONG	Y.EMP.5EE.1018
19	SPINDLE BEARING ALUMINUM	Y.EMP.5EE.1019
20	6202 ZZ BEARING	Y.EMP.5EE.1020
21	GEAR	Y.EMP.5EE.1021
22	SLOTTED PIN 5x20	Y.EMP.5EE.1022
23	AZM MASON NUT	Y.EMP.5EE.1023
24	HALOGEN LAMP	Y.EMP.5EE.1024
25	GEAR CHAIN	Y.EMP.5EE.1025

H SPARE PART LIST- EXPLODING DRAWINGS

PRODUCT CODE : EHGE30		
NO	**PRODUCT NAME**	**P.CODE**
1	CHASSIS	Y.EMP.PLS.5EE.1001
2	GEAR CHAIN LOCK	Y.EMP.PLS.5EE.1002
3	OIL PAN PLATE	Y.EMP.PLS.5EE.1003
4	FLAT SHEET	Y.EMP.PLS.5EE.1004
5	BAKALITE HANDLE	Y.EMP.PLS.5EE.1005
6	TEMPERED GLASS RIGHT LEFT	Y.EMP.PLS.5EE.1006
7	RESISTANCE SHEET	Y.EMP.PLS.5EE.1007
8	CHICKEN ROASTING SHAFT	Y.EMP.PLS.5EE.1008
9	DOOR LOCK CLIP	Y.EMP.PLS.5EE.1009
10	RESISTANCE INTERMEDIATE SHEET	Y.EMP.PLS.5EE.1010
11	RESISTANCE INTERMEDIATE SHEET	Y.EMP.PLS.5EE.1011
12	KELVİN CHICKEN MOTOR 45 KW	Y.EMP.PLS.5EE.1012
13	HALOGEN LAMP SENSE	Y.EMP.PLS.5EE.1013
14	ŞARTEL TRİFAZE 3x20A	Y.EMP.PLS.5EE.1014
15	RESISTANCE	Y.EMP.PLS.5EE.1015
16	ON-OFF SWITCH	Y.EMP.PLS.5EE.1016
17	BEARING SHAFT SHORT	Y.EMP.PLS.5EE.1017
18	BEARING SHAFT LONG	Y.EMP.PLS.5EE.1018
19	SPINDLE BEARING ALUMINUM	Y.EMP.PLS.5EE.1019
20	6202 ZZ BEARING	Y.EMP.PLS.5EE.1020
21	GEAR	Y.EMP.PLS.5EE.1021
22	SLOTTED PIN 5x20	Y.EMP.PLS.5EE.1022
23	AZM MASON NUT	Y.EMP.PLS.5EE.1023
24	HALOGEN LAMP	Y.EMP.PLS.5EE.1024
25	GEAR CHAIN	Y.EMP.PLS.5EE.1025

H SPARE PART LIST- EXPLODING DRAWINGS

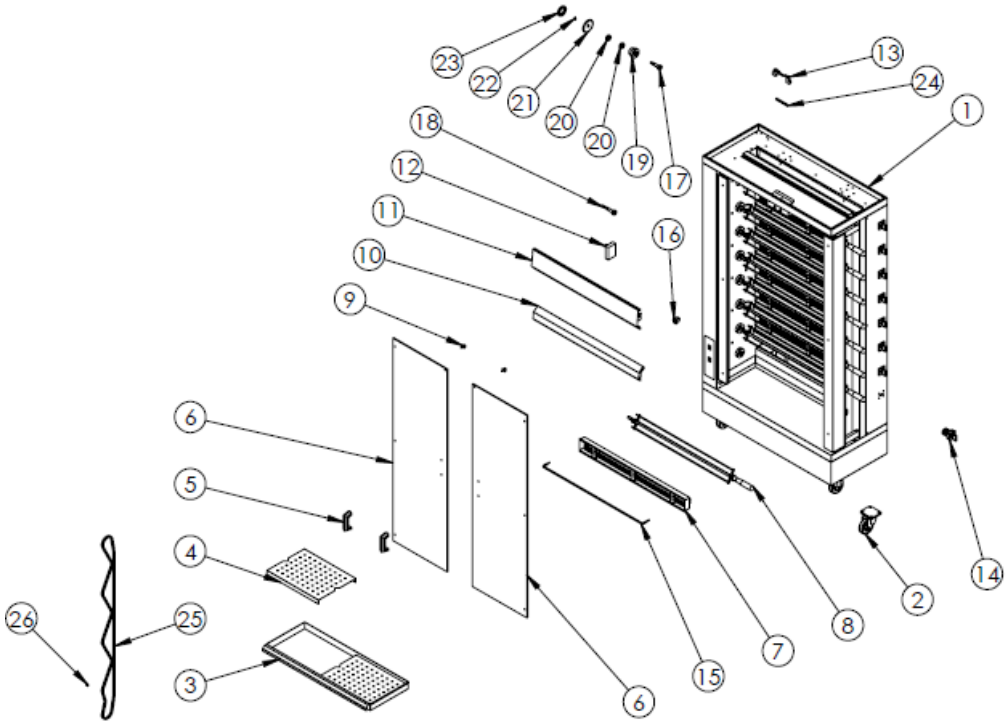

EHGE48

H SPARE PART LIST- EXPLODING DRAWINGS

PRODUCT CODE : EHGE48		
NO	**PRODUCT NAME**	**P.CODE**
1	CHASSIS	Y.EMP.8EE.1001
2	GEAR CHAIN LOCK	Y.EMP.8EE.1002
3	OIL PAN PLATE	Y.EMP.8EE.1003
4	FLAT SHEET	Y.EMP.8EE.1004
5	BAKALITE HANDLE M6	Y.EMP.8EE.1005
6	TEMPERED GLASS RIGHT LEFT	Y.EMP.8EE.1006
7	RESISTANCE SHEET	Y.EMP.8EE.1007
8	CHICKEN ROASTING SHAFT	Y.EMP.8EE.1008
9	DOOR LOCK CLIP	Y.EMP.8EE.1009
10	RESISTANCE INTERMEDIATE SHEET	Y.EMP.8EE.1010
11	RESISTANCE INTERMEDIATE SHEET	Y.EMP.8EE.1011
12	KELVİN CHICKEN MOTOR 45 KW	Y.EMP.8EE.1012
13	HALOGEN LAMP SENSE	Y.EMP.8EE.1013
14	ŞARTEL TRİFAZE 3x20A	Y.EMP.8EE.1014
15	RESISTANCE	Y.EMP.8EE.1015
16	ON-OFF SWITCH	Y.EMP.8EE.1016
17	BEARING SHAFT SHORT	Y.EMP.8EE.1017
18	BEARING SHAFT LONG	Y.EMP.8EE.1018
19	SPINDLE BEARING ALUMINUM	Y.EMP.8EE.1019
20	6202 ZZ BEARING	Y.EMP.8EE.1020
21	GEAR	Y.EMP.8EE.1021
22	SLOTTED PIN 5x20	Y.EMP.8EE.1022
23	AZM MASON NUT	Y.EMP.8EE.1023
24	HALOGEN LAMP	Y.EMP.8EE.1024
25	GEAR CHAIN	Y.EMP.8EE.1025
26	GEAR CHAIN LOCK	Y.EMP.8EE.1026

H SPARE PART LIST- EXPLODING DRAWINGS

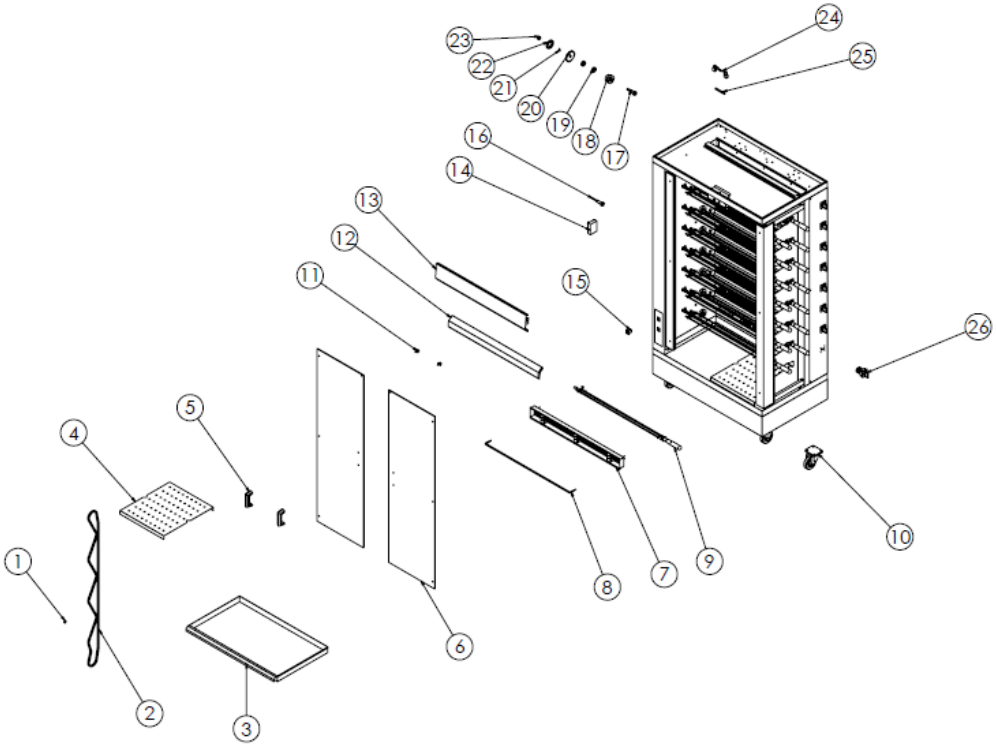

EMP.8EED

H SPARE PART LIST- EXPLODING DRAWINGS

PRODUCT CODE : EMP.8EED		
NO	**PRODUCT NAME**	**P.CODE**
1	GEAR CHAIN LOCK	Y.EMP.8EED.1001
2	GEAR CHAIN	Y.EMP.8EED.1002
3	OIL PAN PLATE	Y.EMP.8EED.1003
4	OIL PAN FLAT SHEET	Y.EMP.8EED.1004
5	KEEPING BAKALITE (M6) NO 1	Y.EMP.8EED.1005
6	TEMPERED GLASS RIGHT LEFT 465 * 1500 * 6 MM	Y.EMP.8EED.1006
7	RESISTANCE SHEET RESISTANCE CARD SHEET UPPER RESISTANCE COMB HAIR LOWER M8 NO: 5 BAKALITE OVAL 11 CM ARMUID HANDLE	Y.EMP.8EED.1007
8	117749 220V 1000W L: 86 cm U FLAT REZ. M4 DRY LB.5 2 BIG.	Y.EMP.8EED.1008
9	HANDLE BUSH BROACH HANDLE CONNECTION INTERMEDIATE 12 * 12 MM SQUARE ROTARY SPINDLE SHOT FIXED PLATE ŞİŞ RIGHT LEFT SPINDLE DIAMETER 5,8 MM	Y.EMP.8EED.1009
10	100 * 32 TABLE DRUNK WHEEL	Y.EMP.8EED.1010
11	DOC013 PANEL CLIP METAL STUD M5	Y.EMP.8EED.1011
12	DOC043 PANEL CLIP METAL DOOR LOCK CLIP	Y.EMP.8EED.1012
13	RESISTANCE INTERMEDIATE SHEET	Y.EMP.8EED.1013
14	RESISTANCE INTERMEDIATE SHEET	Y.EMP.8EED.1014
15	KELVIN CHICKEN ROASTING MOTOR 45 KW	Y.EMP.8EED.1015
16	ILLUMINATED SQUARE KEY-GREEN-DOUBLE	Y.EMP.8EED.1016
17	BEARING SHAFT LONG	Y.EMP.8EED.1017
18	BEARING SHAFT SHORT	Y.EMP.8EED.1018
19	SPINDLE BEARING	Y.EMP.8EED.1019
20	6202 ZZ BEARING (35 * 15 * 11)	Y.EMP.8EED.1020
21	20 GEAR	Y.EMP.8EED.1021
22	SLOTTED PIN (5X20)	Y.EMP.8EED.1022
23	KM-09 AZM MASON NUT	Y.EMP.8EED.1023
24	B-MSM-GLV-ABP-M14	Y.EMP.8EED.1024
25	500W HALOGEN BULB SENSE EMFA.2211	Y.EMP.8EED.1025
26	500W HALOGEN BAR BULB GLOBAL.J118 (OSRAM BRAND)	Y.EMP.8EED.1026

I ELECTRIC CIRCUIT SCHEMA

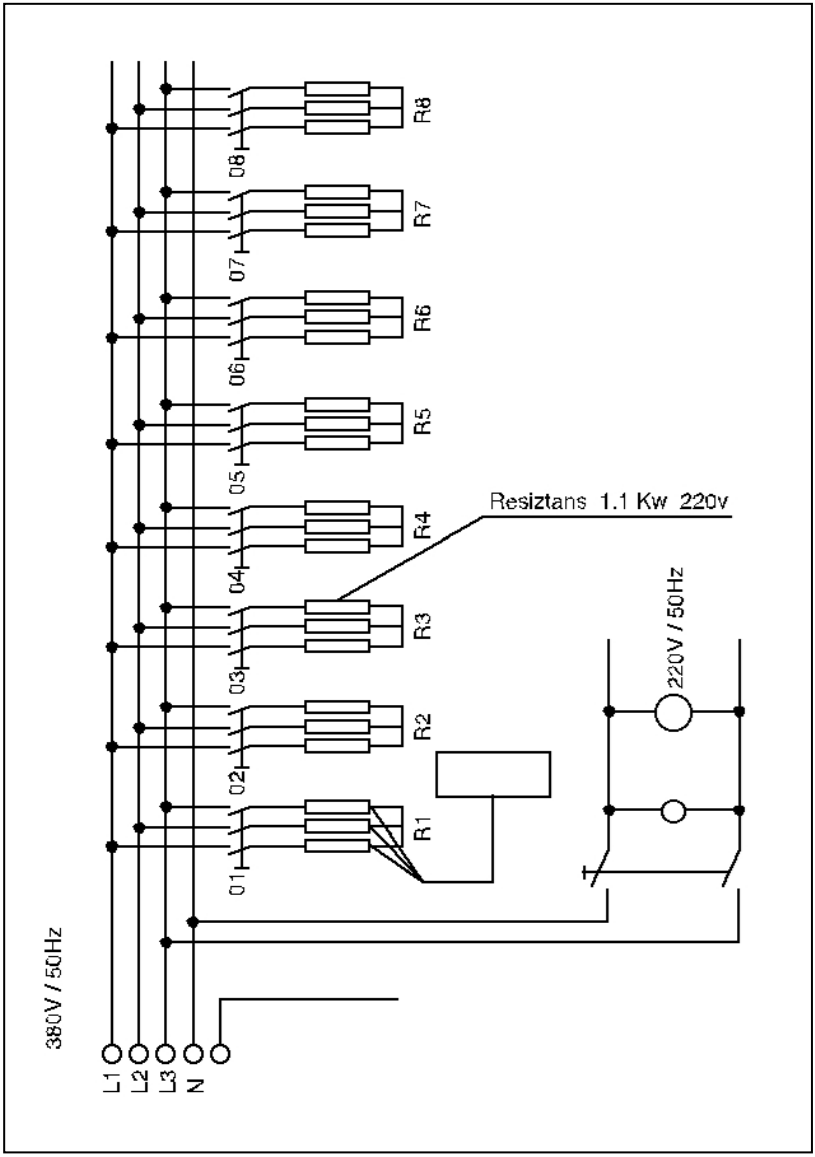

GGM Gastro International GmbH
Weinerpark 16
D-48607 Ochtrup

www.ggmgastro.com info@ggmgastro.com
+49 2553 7220 0