Electric Griddle
User manual

BPJ432

BPJ642

BPJ642GG

Thanks for your purchasing and using Electric Griddle. For making full use of function of this product and reducing unnecessary damage and injure. Please read this manual carefully before using this machine and keep it well for future reference.

Warning ! Any refitting and wrong installation, adjustment and maintenance can lead to property loss and causality. Please contact the supplier if user needs to adjust it and all these should be done by trained special professionals.

Warning ! For your safety sake, do not put or store any flammable liquid, gas or other objects around the product.

Warning ! The shell of this equipment must be grounded for Safety sake. Thanks for your cooperation!

Electric Griddle is designed and developed by the company with combination of the advantage of both foreign and domestic similar products and achieves advantages such as fashionable design, reasonable structure and convenient operation and maintenance and durability. The temperature of the heating panel can be regulated in a certain scale according to different cooking requirements. Mainly used for baking food, it is the first choice for the food industry enterprises such as western food restaurants, fast food restaurants, hotels and supermarkets and etc.

1. Product features：

This product is designed by our company absorbing the advantages of similar foreign products. It has the characteristics of novel style, reasonable structure, convenient operation, fast heating speed, uniform temperature, and energy saving. It is suitable for hotels, shopping malls, supermarkets, and places with large passenger flow.

1.1 Crepe machine technical data sheet：

Name	Model	Voltage	Power	Temperature controller number	Temperature range	Product outer Dimension: mm	Net weight
Electric Griddle	**BPJ432**	220~240V	2.2KW	1	50~300℃	410*305*290	13.9KG
Electric Griddle	**BPJ642**	220~240V	4.4KW	2	50~300℃	650*470*310	26KG
Electric Griddle	**BPJ642GG**	220~240V	4.4KW	2	50~300℃	650*470*310	26KG

2. Instructions：

2.1 The thermostat is on the front of the product, one on the left and right of the dual temperature control product, which can be used alone or at the same time. The thermostat on the left controls the temperature of the grill on the left, and the thermostat on the right controls the temperature of the grill on the right.

2.2 Do not damage, excessively bend, stretch, or twist the power cord, and do not place heavy objects or clamp the power cord.

2.3 After use, the thermostat knob should be adjusted to the "0" position, and then pull out the plug from the socket to avoid leakage or insulation aging vibration.

2.4 This product should be installed in a dry, clean, well-ventilated location, and placed in a horizontal position.

2.5 In order to ensure safety, the product must be grounded and a leakage switch is installed to ensure personal safety, otherwise it must not be used.

2.6 Please unplug it and wait for the product to cool down before moving, checking or cleaning.

2.7 Do not insert or unplug the plug with wet hands to avoid electric shock.

2.8 According to the production of different foods, adjusting the required temperature can make the prepared foods get the desired effect.

3. Transport and storage：

During transportation, this product should be handled with care to prevent severe vibration. The packaged product should generally be placed in a well-ventilated place to avoid long-term open storage. It should be stored in a warehouse without corrosive gas. For temporary storage, rain-proof measures should be adopted. Do not invert or stack the product to prevent damage to the product.

4. Installation Precautions：

4.1 The power supply and voltage used by this equipment must be consistent with the power supply voltage of the product power plate.

4.2 The user needs to install a sufficient amount of power switch or air switch or (fuse breaker and leakage protector, etc.) near the equipment, and no debris is allowed in front of the switch for easy operation.

4.3 There are grounding bolts at the back of this equipment, and no less than 2.5 copper core wires should be used to reliably connect to the grounding wire that meets safety regulations during installation.

4.4 The "Equipotential Connection Terminal" on the equipment shell can be used for repeated grounding of the equipment, and the on-site installer decides whether to connect or not.

4.5 The power connection must be made by an electrical professional. The protection of this machine against touching live parts is Class I, and a large-opening (contact distance of more than 3mm), all-pole disconnection leakage protection switch must be installed in the power supply line.

4.6 The "green/yellow two-color wire" in the power cord is a grounding wire, which must be reliably connected to a protective conductor that complies with the national electricity safety regulations.

4.7 ▲Warning：It is strictly forbidden to connect the ground wire to the water pipe, gas pipe, heating pipe and other pipes, otherwise it may cause a safety accident.

4.8 ▲Warning：Pay attention to the high temperature of the equipment and do not touch the equipment casually to prevent burns. You must wait until the temperature drops to dissipate heat before the equipment can be moved or cleaned.

4.9 ▲Warning：During installation, do not place appliances on certain surfaces close to walls, partitions, kitchen equipment and the like unless they are made of non-combustible materials

or the surfaces are covered with non-combustible insulation materials, and pay attention to waterproof regulations.

4.10 ▲ Warning：For people who have physical, sensory or intellectual defects, or lack of experience and knowledge (including children), this manual is not applicable.

4.11"Equipotential Mark"-⏚ "Instructions for use: scope of application: used in various equipment, indicating those terminals that make each part of the equipment or system reach the same potential after being connected to each other, which is not necessarily ground potential, such as local interconnection lines

5. Safety precautions and use environment and use requirements：

5.1 This product should be placed in a stable place, the left and right sides should be more than 10cm away from incombustible materials, and the back should be more than 20cm away from incombustible materials (such as brick walls).

5.2 This equipment must be safely grounded before use. Before starting the machine, check whether the wiring is loose, whether the voltage used is correct, and whether the safety ground connection is reliable. The shell of this machine must be grounded to ensure safety. Thank you for your cooperation!

5.3 Whether the electrical components of the product are firmly connected and whether the safety grounding is reliable.

5.4 If the power cord is damaged, in order to avoid danger, it must be replaced by professionals from the manufacturer, its maintenance department or similar departments.

5.5 The installation and maintenance of the electrical connection of this product should be performed by professionals with electrician operation certificates.

5.6 The power cord should be an oil-resistant sheathed cable, not lighter than ordinary neoprene or other equivalent synthetic rubber sheathed cord H05RN-F.

5.7 The equipment cannot be stored and used in the open air, and cannot be used in places where it is particularly humid or dripping with water.

5.8 The equipment must be fixed and placed before use to prevent the equipment from moving during use.

5.9 If the appliances are placed close to walls, partitions, kitchen equipment, decorations, etc., it is recommended that these equipment and facilities be made of non-combustible materials, otherwise they should be covered with suitable non-combustible insulation materials, and pay close attention to fire protection regulations.

5.10 should be operated by designated personnel, and be proficient in the use of machinery and equipment.

5.11 The machine should not be touched by customers when it is working to avoid burns.

5.12 Be cautious when moving the machine, look for faults carefully, and do not knock.

6. Operation method:

6.1 The thermostat is located in front of the product to control the heating temperature of the electrical heat tube from to ensure the use of the aluminum plate temperature.

6.2 Firstly,turn on the power, the green indicator light on the control panel lights up, and then turn the thermostat clockwise to align the scale of the temperature control knob with the desired temperature value. At this time, the orange indicator light is on and the current has been supplied to the the machine and the heating tube start to work. When the temperature rises to the required temperature, the thermostat can automatically cut off the power, at the same time the orange indicator light goes out, and the heating tube stops working. When the temperature drops slightly, the thermostat can automatically turn on the power, the orange indicator light is on, the electrical heating tube resumes heating, and the temperature rises. Repeat this cycle to maker sure that It's constant within the temperature range. According to need, adjust the temperature to the required temperature scale, so that the prepared food can get the ideal effect.

6.3 If there is any abnormal phenomenon occurs in the process of use,must be stopped to use immediately, and can be continued after the inspection and troubleshooting.

6.4▲Warning: After finishing work every day, all power supplies of the equipment must be cut off. Don't forget to turn off the power.

6.5▲Warning: When the appliance with multiple power supplies fails to be repaired, ensure the safe maintenance operation process. All working power supplies must be cut off before the maintenance operation can be carried out.

7. Cleaning and maintenance:

7.1 During cleaning and maintenance, the power supply should be cut off to prevent accidents.

7.2 After working every day, use a wet towel that does not contain corrosive detergents to clean the surface of the body and the surface of the power lead. It is strictly forbidden to rinse with water to avoid damage to the electrical performance. Cause a leakage accident.

7.3 Note: Appliances must not be cleaned with water jets or immersed in water to prevent electrical leakage caused by splashing.

8. Product electrical schematic diagram：

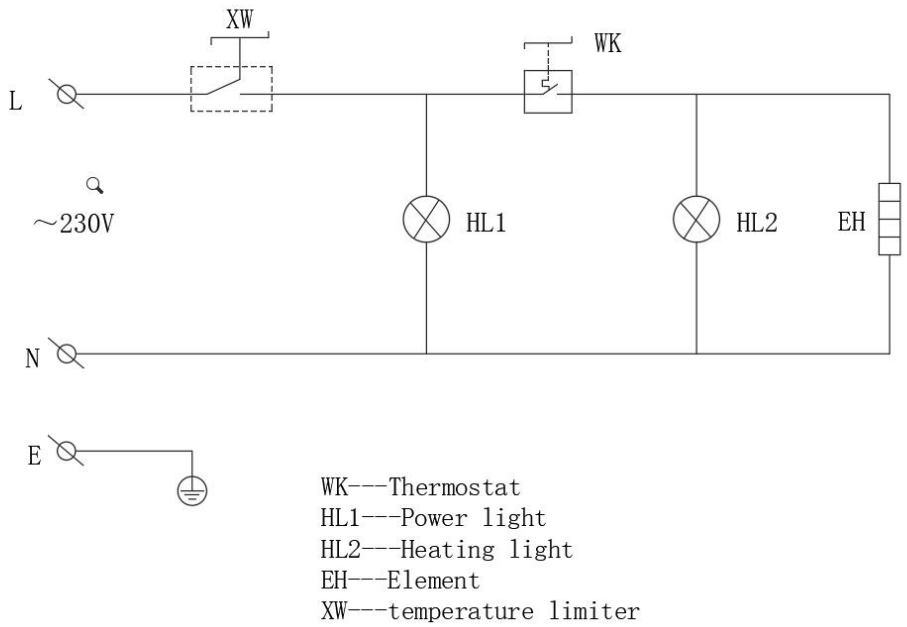

BPJ432/ BPJ642/BPJ642GG

9. General troubleshooting methods：

Fault phenomenon	The reason	Elimination method
1.Power on, the green indicator light is off.	1.Power supply switch fuse is broken. 2.Poor contact of the power cord.	1.Check the cable. 2.Fix the cable.
2.The orange indicator light does not go out, and the temperature rise is not controlled.	1.Thermostat malfunction.	1.Change thermostat.
3.The orange indicator light is off, and the temperature control is normal.	1.Bad connection of indicator light. 2.Burn out of indicator light.	1.Fix the wire. 2.Change indicator light.
4.Orange indicator light is on, but not heating.	1.Wrong indicator wiring. 2.Heating tube is broken.	1.Correct the wire. 2.Change heating tube.

5.When the machine suddenly stops heating in use,The power and green indicator light all are off.	1.The Temperature limiter over temperature protection. 2.Temperature limiter is damaged.	1.Turn off the thermostat,wait for the surface temperature of the machine template drops tens of degrees,the temperature limiter will automatically restore power, then turn on the thermostat again,the machine will resume to work. 2.Change the Temperature limiter.

10. Product exploded drawing

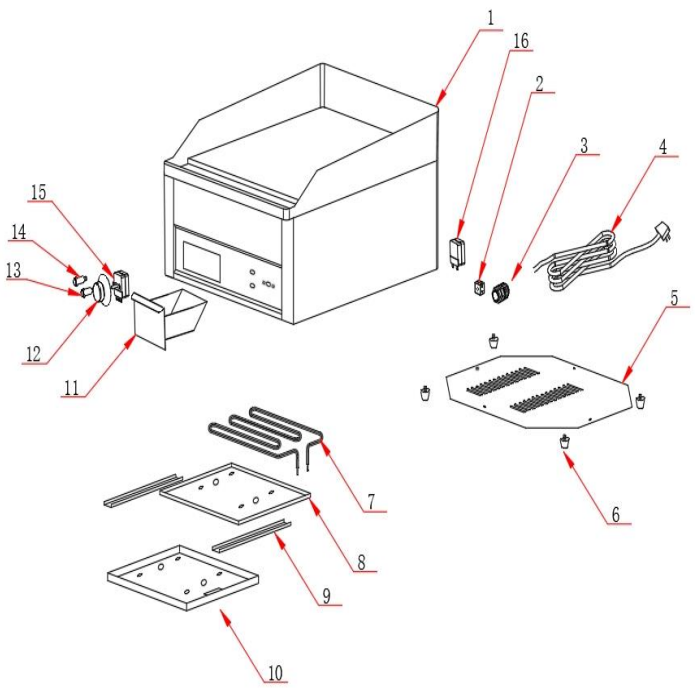

BPJ432

No.	Description	Qty
1	Case	1
2	Five - hole terminal block	1
3	Cable clip	1
4	Power cord	1
5	Bottom sealing plate	1
6	Machine foot	1
7	Element	1
8	Heating tube pressing plate	1
9	Heating tube pressing strip	1
10	Cotton sealing plate	1
11	Oil box	1
12	Knob & Dial	1
13	Green Indicator	1
14	Orange Indicator	1
15	Thermostat	1
16	Temperature limiter	1

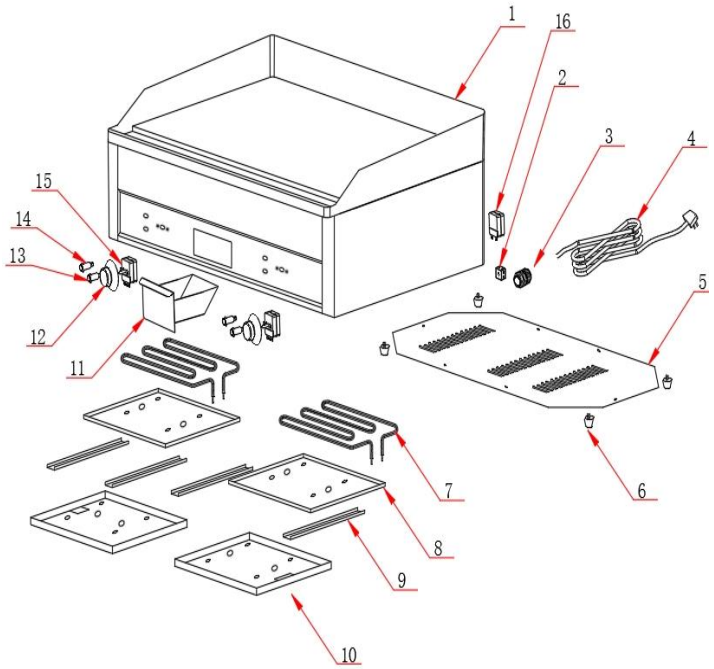

BPJ642 BPJ642GG

No.	Description	Qty
1	Case	1
2	Terminal block	2
3	Cable clip	2
4	Power cord	2
5	Bottom sealing plate	1
6	Machine foot	4
7	Element	2
8	Heating tube pressing plate	2
9	Heating tube pressing strip	4
10	Cotton sealing plate	2
11	Oil box	1
12	Knob & Dial	2
13	Green Indicator	2
14	Orange Indicator	2
15	Thermostat	2
16	Temperature limiter	1

GGM Gastro International GmbH
Weinerpark 16
D-48607 Ochtrup

www.ggmgastro.com info@ggmgastro.com
+49 2553 7220 0